WORKSHOP MANUAL

KB

SECTION 07D

MSG FIVE-SPEED TRANSMISSION

ISUZU MOTORS LIMITED

CONTENTS PAGE

GENERAL DESCRIPTION

GEAR SHIFT DIAGRAM

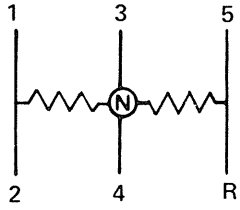

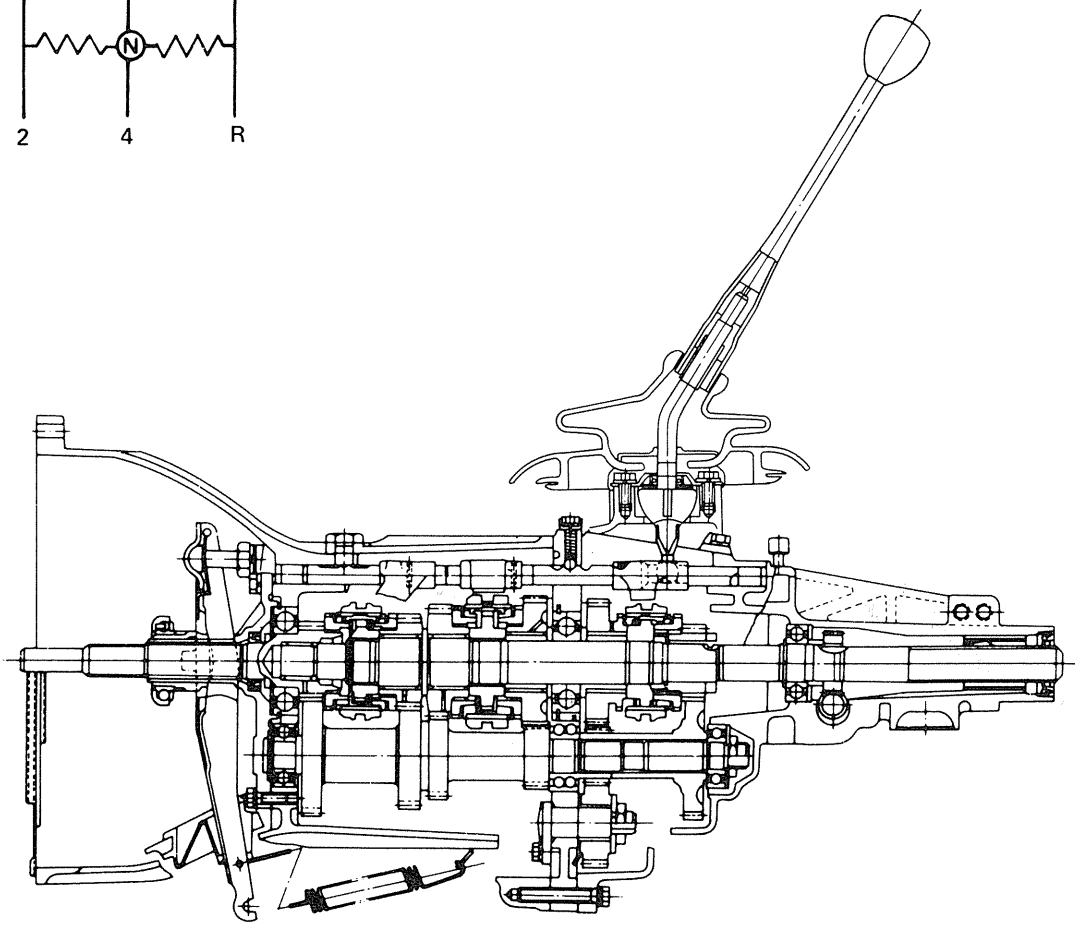

ARRANGEMENT OF GEAR SHIFT CONTROL PARTS

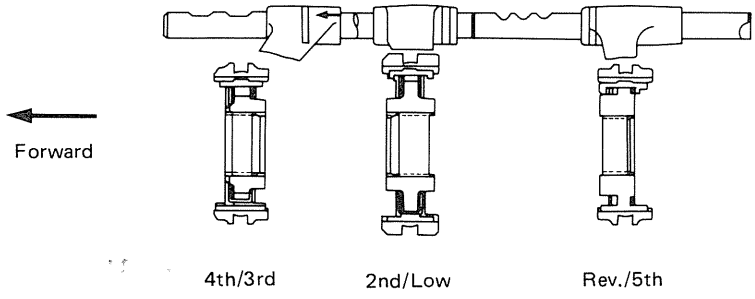

TRANSMISSION CONTROL (REMOTE CONTROL TYPE)

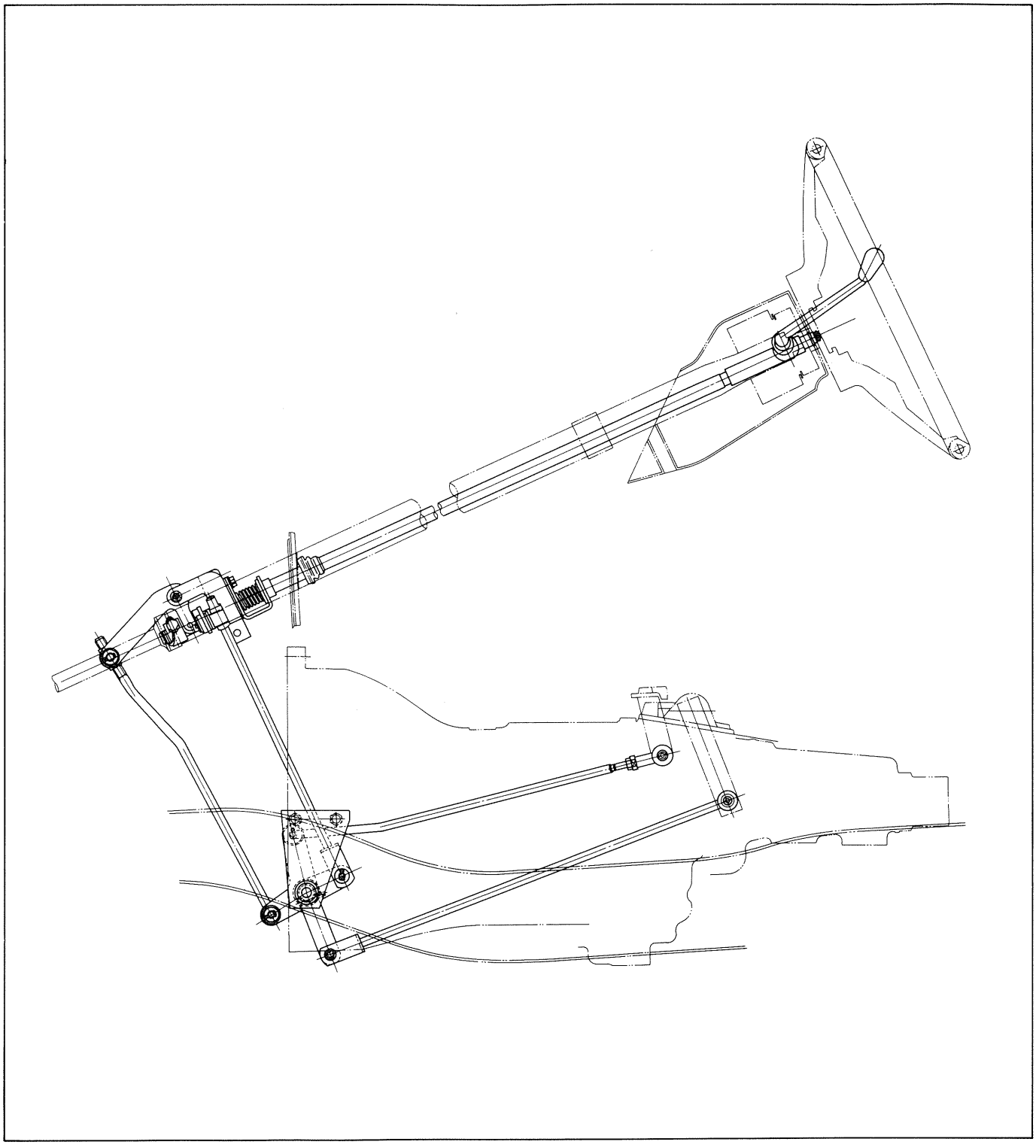

SPECIFICATIONS

Models	KB29	KB21, 23, 26, 28 KBD21, 22, 26, 27	
Transmission Fluid			
Type	Engine oil SAE5W-30		
Capacity	Approx. 1.55 liters (0.41 US gallon)		
Gear shifting	Floor mounted, or remote control type		
Gear Ratios	5C	5L	5K
1st	3.431	4.697	4.122
2nd	1.969	2.841	2.493
3rd	1.364	1.629	1.504
4th	1.000	1.000	1.000
5th	0.855	0.898	0.855
Reverse	3.402	4.277	3.753
Speedometer gear ratio	6/19 (only Australia)	5/17 (payload 1 ton) or 6/19 (payload 0.5 ton)	

FIXING TORQUE

kg·m(ft.lbs.)

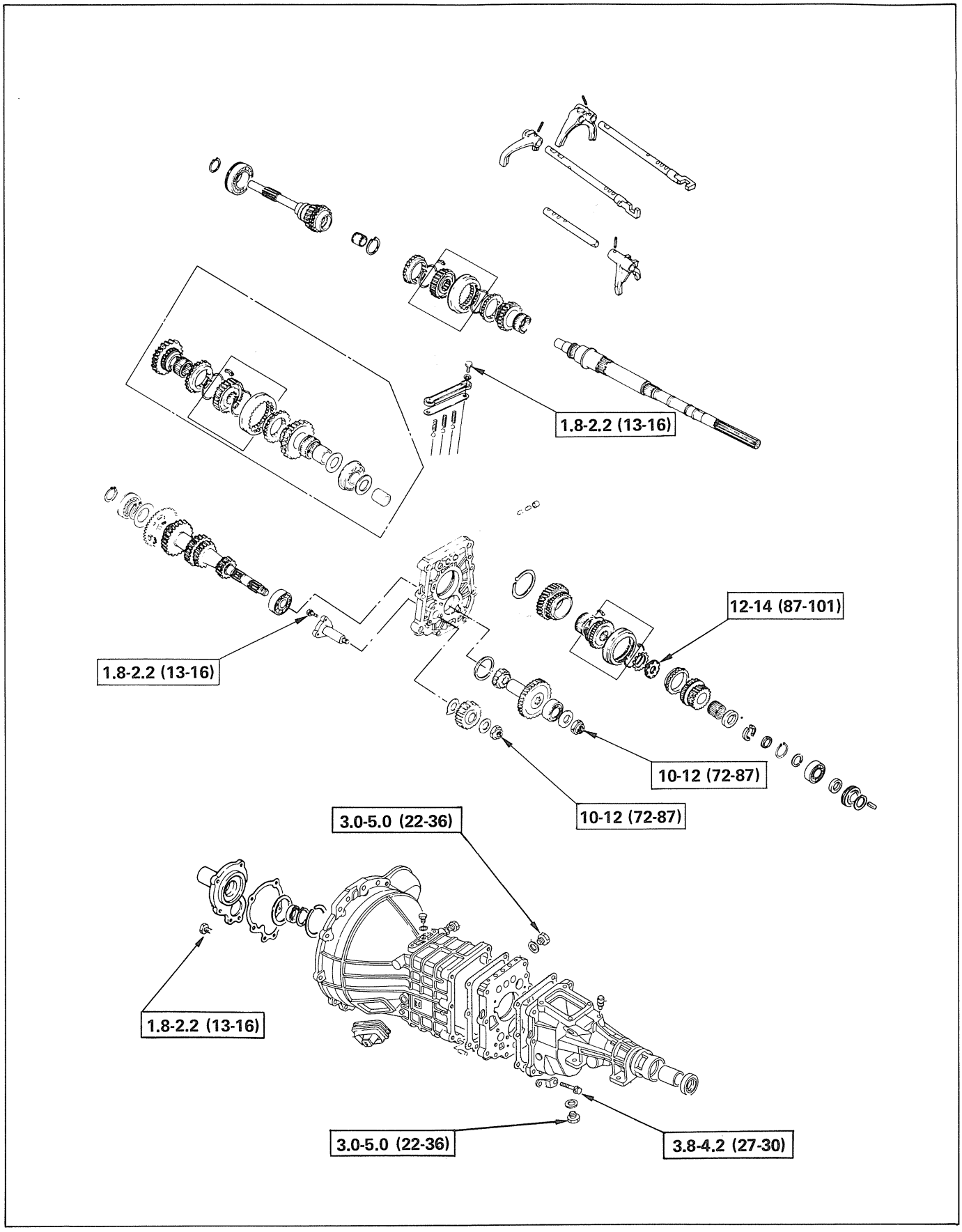

TRANSMISSION ASSEMBLY

REMOVAL AND INSTALLATION

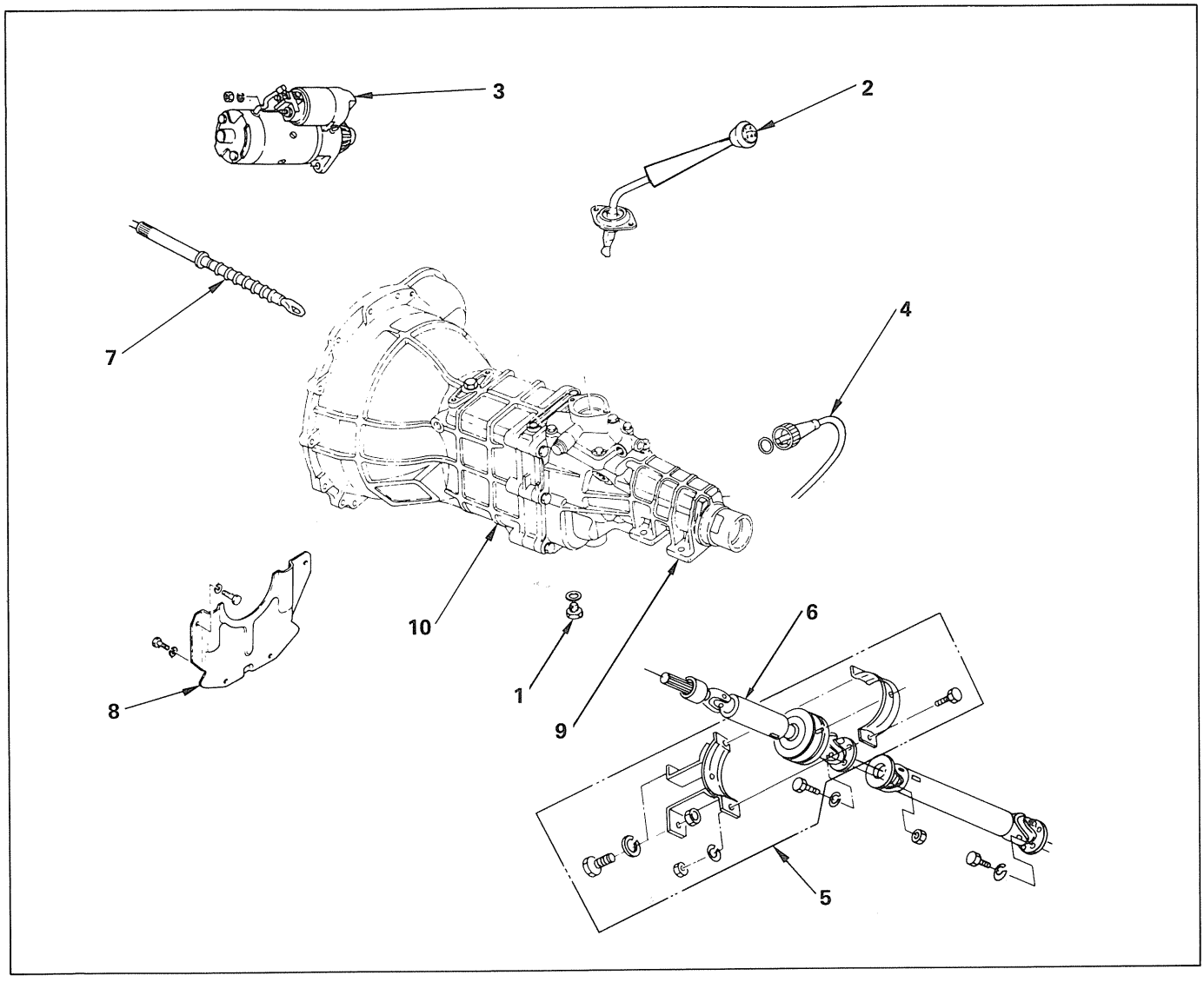

Removal Steps

- ▲ 1. Plug ; magnet, oil drain
- 2. Gear shift lever assembly
- 3. Starter motor
- 4. Speedometer cable
- 5. Center bearing
- 6. Propeller shaft
- 7. Clutch cable
- 8. Flywheel stone guard
- ▲ 9. Frame bracket to transmission rear mount bolts and nuts
- ▲ 10. Transmission to engine attaching bolts and transmission assembly

Installation steps

- ▲ 10. Transmission to engine attaching bolts and transmission assembly
- ▲ 9. Frame bracket to transmission rear mount bolts and nuts
- 8. Flywheel stone guard
- 7. Clutch cable
- ▲ 6. Propeller shaft
- 5. Center bearing
- 4. Speedometer cable
- 3. Starter motor
- 2. Gear shift lever assembly
- ▲ 1. Plug ; magnet, oil drain

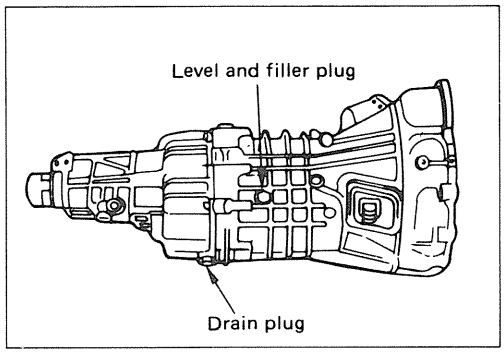

Important operations — Removal

1. **Plug ; magnet, oil drain**

   Drain transmission case and disconnect negative (–) side cable from the battery at terminal.

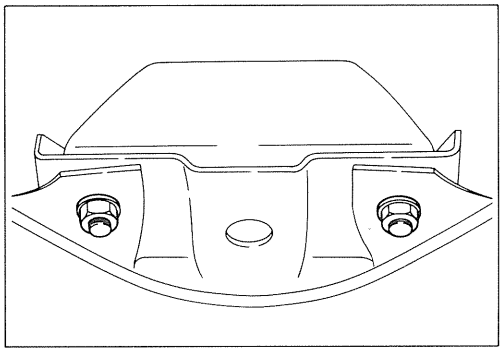

9. **Remove the bracket holding up the rear end of the transmission**

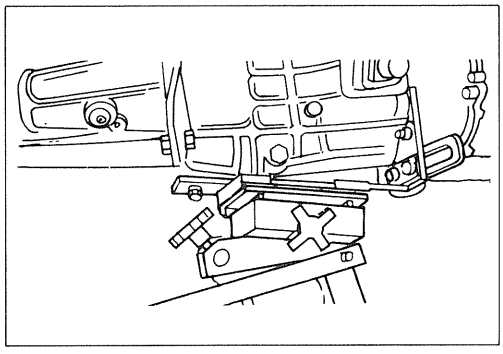

10. **Transmission to engine attaching bolts and transmission assembly.**

    Position a jack under the transmission case, remove engine rear mounting nuts, lower the transmission case slightly, then remove bolts attaching quadrant box cover to transmission case.
    Disconnect back-up light switch harness, neutral switch harness and other harnesses at connector.

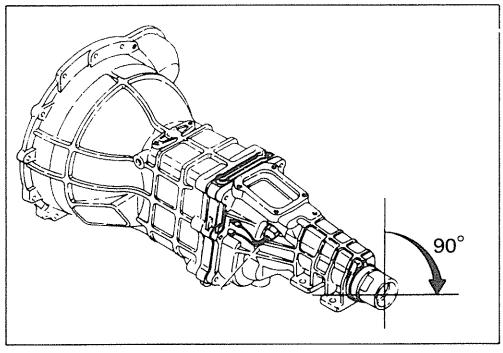

When removing transmission, turn the transmission case 90 degrees clock wise for easier removal.

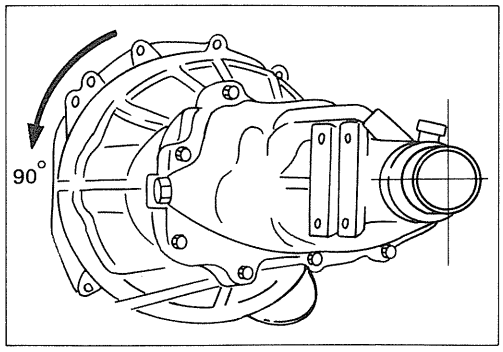

Important operations — Installation

10. Transmission to engine attaching bolts and transmission assembly

Position the transmission assembly with the speedometer cable mounting surface turned downward and slide the assembly forward, guiding the gear shaft into pilot bearing.

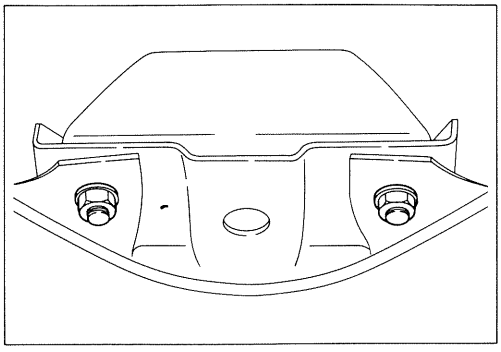

9. Install the bracket holding up the rear end of the transmission

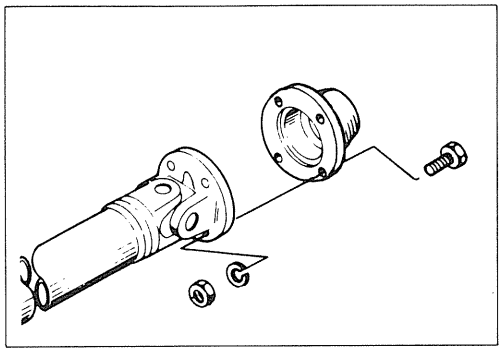

6. Propeller shaft

Install the bolts from the extension shaft side.

Torque	kg·m(ft.lbs.)	3—3.4 (22—25)

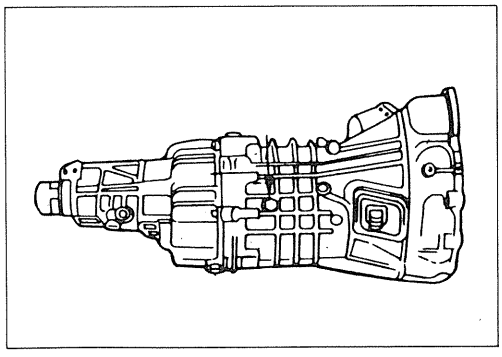

1. Plug ; magnet, oil drain

Install and tighten drain plug to specification, remove the filler plug and fill the transmission case with transmission fluid to the specified level.

Install and tighten the filler plug to the specified torque (the same torque should be used for tightening drain plug and filler plug).

DISASSEMBLY

MAJOR COMPONENT

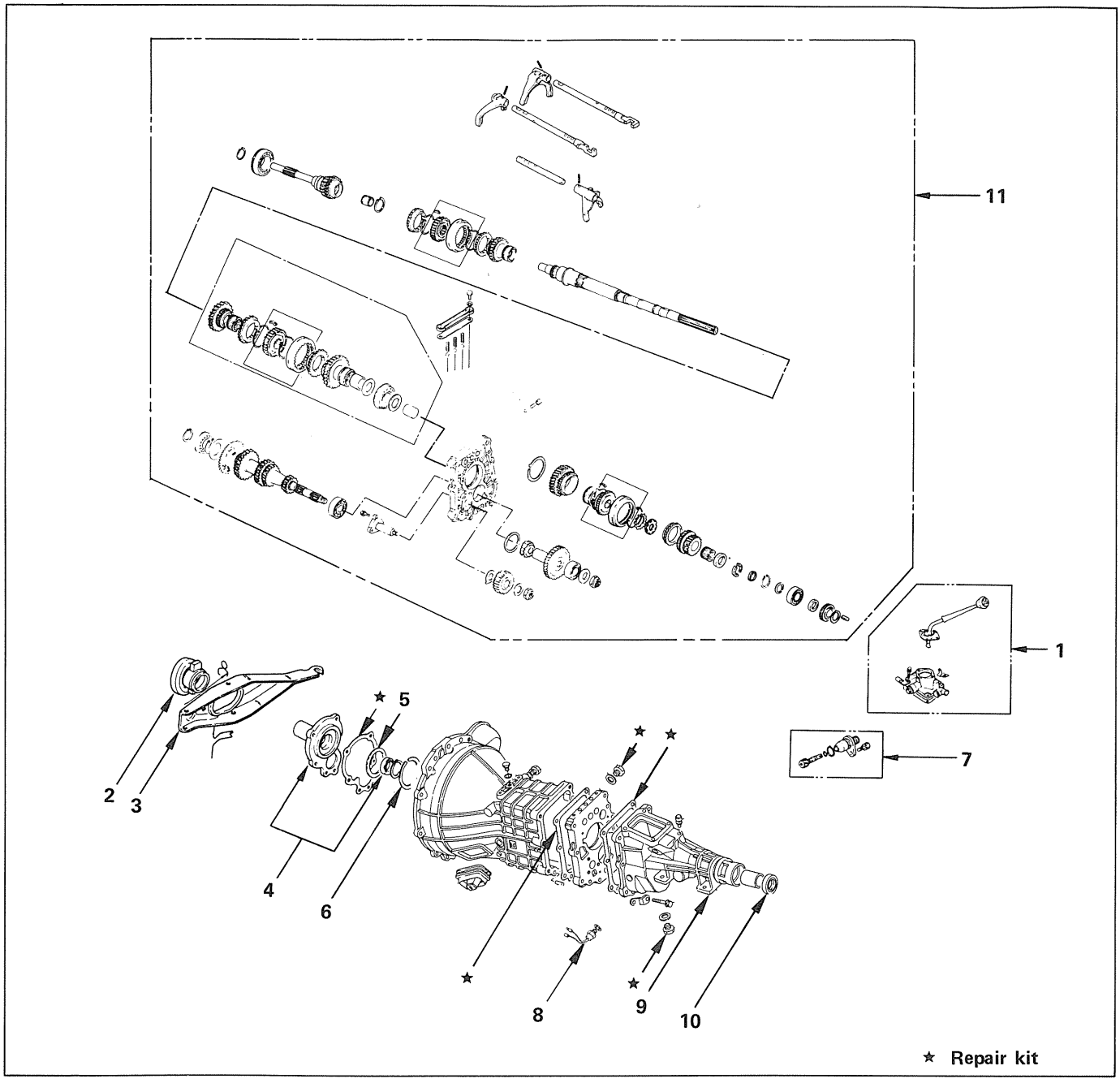

Disassembly steps

1. Quadrant box
2. Shift block assembly
3. Withdraw lever
4. Front cover ; oil seal
5. ▲ Belleville spring
6. Snap ring
7. Speedometer driven gear assembly
8. Back-up light switch
9. Rear cover
10. Oil seal
11. Main shaft assembly, cluster gear assembly and top gear shaft assembly

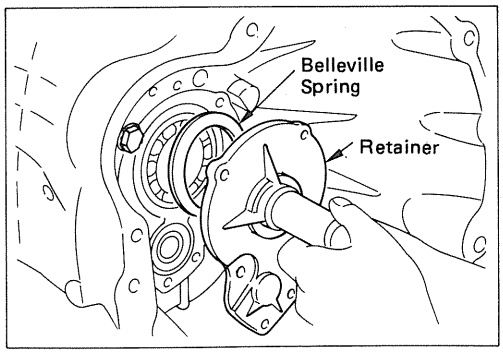

Important operation

5. Belleville spring

Remove the bearing retainer and the retainer, gasket and belleville spring.

MINOR COMPONENTS

MAIN SHAFT ASSEMBLY, CLUSTER GEAR ASSEMBLY AND TOP GEAR ASSEMBLY

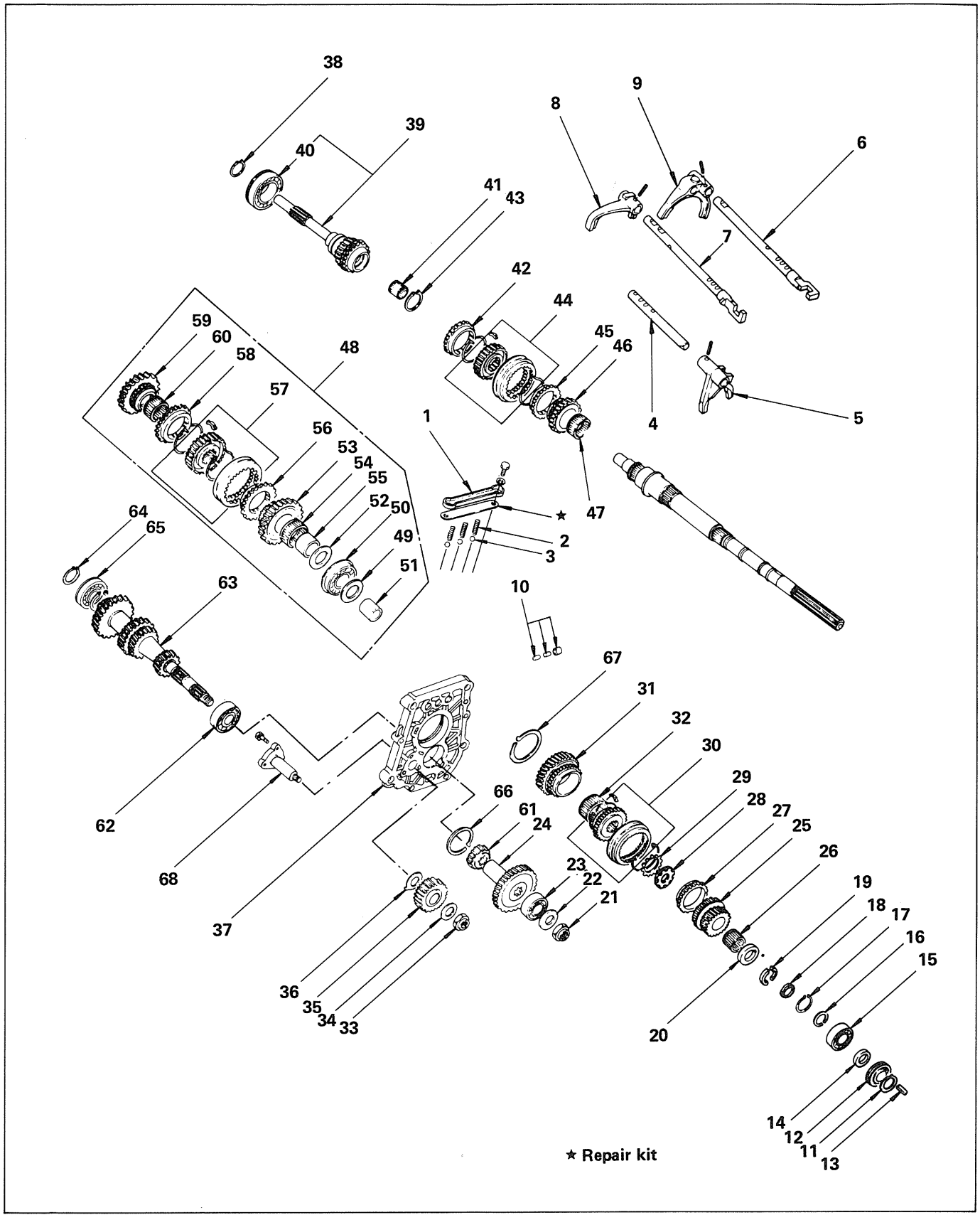

Disassembly steps

1. Plate ; detent spring
2. Spring ; detent ball
3. Ball ; detent, gear shift
4. ▲ Shaft ; arm, gear shift, reverse-5th
5. Fork ; reverse-5th, shift
6. ▲ Shaft ; gear shift low-2nd
7. ▲ Shaft ; gear shift, top-3rd
8. Fork ; top-3rd, shift
9. Fork ; low-2nd, shift
10. Pin and plug ; inter lock
11. Ring ; snap, speed drive gear
12. Gear ; speed, drive
13. Key ; feather, speed drive gear
14. Spacer ; bearing, drive gear
15. Bearing ; ball, main shaft end
16. Ring ; snap, ball bearing
17. Ring ; snap, thrust ring
18. Retaning ring
19. Thrust ring ; 5th gear
20. Washer ; thrust, 5th
21. Nut ; self lock, counter
22. Washer ; plane, counter 5th gear
23. ▲ Bearing ; ball, counter end
24. ▲ Gear ; counter, 5th
25. Gear assembly ; 5th with synchronizer cone
26. Bearing ; needle, 5th
27. Ring ; block, 5th
28. ▲ Nut ; main shaft
29. Washer ; lock, main shaft
30. Synchronizer assembly ; reverse-5th
31. Gear ; reverse, main shaft
32. Bearing ; needle, low
33. Nut ; self lock, counter
34. Washer ; thrust, reverse idle, rear
35. Gear ; reverse idle, with bushing
36. Washer ; thrust, reverse idle, front
37. Plate ; intermediate
38. Ring ; snap, bearing to top shaft
39. Shaft ; top gear, with synchronizer cone
40. ▲ Bearing ; ball, top gear shaft
41. Bearing ; needle, main shaft
42. Ring ; block, top-3rd
43. Ring ; snap, main shaft
44. Synchronizer assembly ; top-3rd
45. Ring ; block, top-3rd
46. Gear assembly ; 3rd with synchronizer cone
47. Bearing ; needle, 2nd, 3rd
48. ▲ Gear assembly ; low-2nd
49. Washer ; thrust, low
50. ▲ Bearing ; radial ball, main shaft
51. Coller ; needle bearing, low
52. Washer ; thrust, low
53. Gear assembly ; low, with synchronizer cone
54. Bearing ; needle, low
55. Coller ; needle bearing, low
56. Ring ; block, low-2nd
57. Synchronizer assembly ; low-2nd
58. Ring ; block, low-2nd
59. Gear assembly ; 2nd with synchronizer cone
60. Bearing ; needle, 2nd, 3rd
61. ▲ Gear ; counter reverse
62. ▲ Bearing ; angular ball, cluster
63. Gear ; cluster
64. Ring ; snap, cluster gear
65. Bearing ; ball, counter front
66. Ring ; snap, cluster gear
67. Ring ; snap, main shaft
68. Shaft ; reverse idle

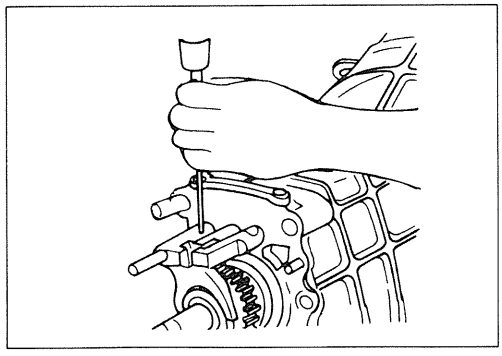

Important operations

4. Shift ; arm, gear reverse-5th

Spring pin remover : 9-8529-2201-0

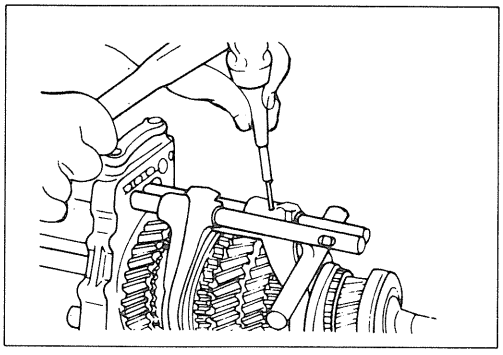

6. Shift ; arm, gear shift, low-2nd

7. Shift ; arm, gear shift, top-3rd

When removing the spring, hold a round bar against the end of the shift rod for protection against damage.

Spring pin remover : 9-8529-2201-0

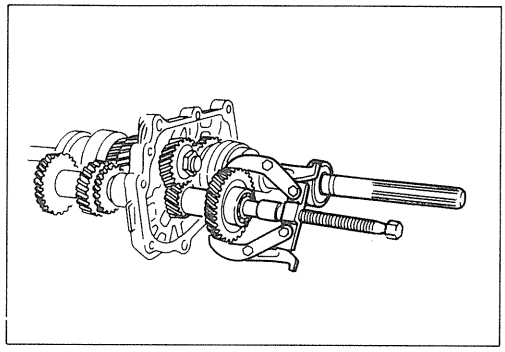

23. Bearing ; ball, counter end

24. Gear ; counter, 5th

Remover : 5-8840-0013-0
(J-22888)

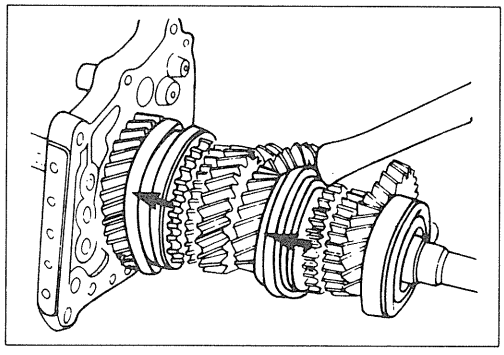

28. Nut ; main shaft

(1) Engage top/3rd synchronizer with the third gear and Low/2nd side synchronizer with the Low gear, then attach Tool to the main shaft and the countergear.

Holding fixture : 5-8840-2001-0
(J-29768)

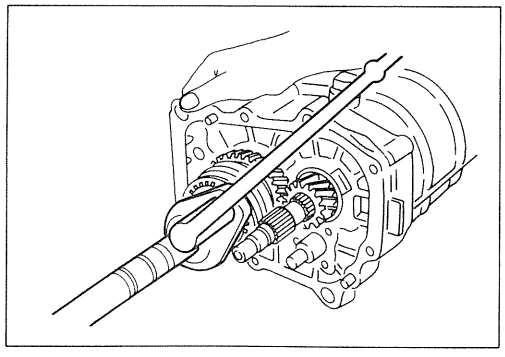

(2) This operation is necessary to prevent turning of the shaft when removing main shaft rear and countershaft reverse gear lock nut.

Wrench : 5-8521-9014-0
(J-33441)

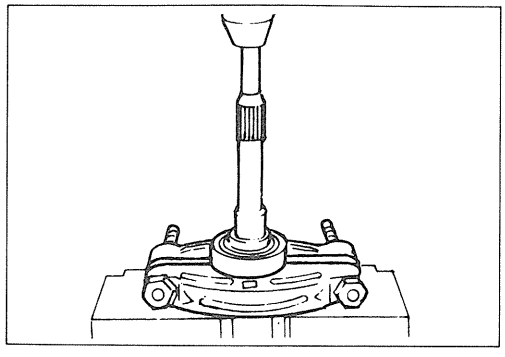

40. Bearing ; ball, top gear shaft

Use a bench press

Bearing remover : 5-8840-0015-0
(J-22912-01)

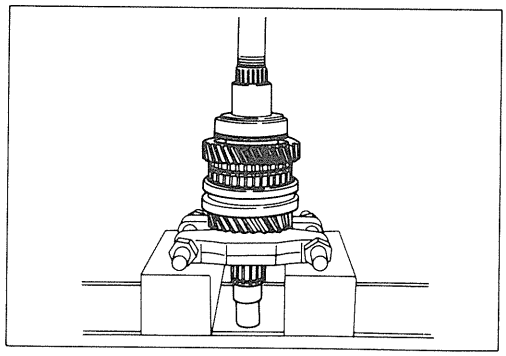

48. Gear assembly ; low-2nd

Remove the parts (47 through 58) from the main shaft together using special tool.

Bearing remover : 5-8840-0015-0
(J-22912-01)

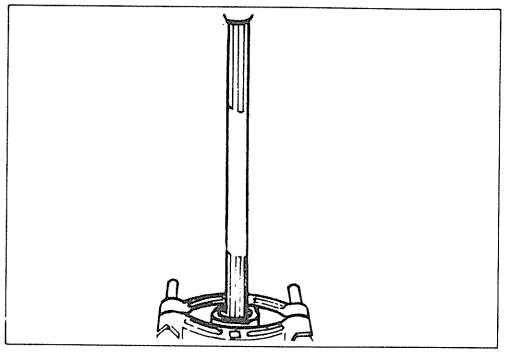

50. Bearing ; radial ball, main shaft

Use a bench press.

Bearing remover : 5-8840-0015-0
(J-22912-01)

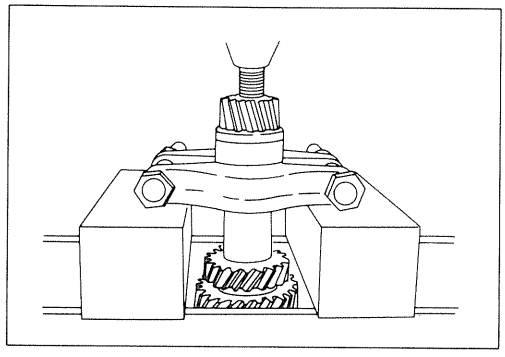

61. Gear ; counter reverse

62. Bearing ; angular ball, cluster

Use a bench press for removal.

Bearing remover : 5-8840-0015-0
(J-22912-01)

QUADRANT BOX ASSEMBLY

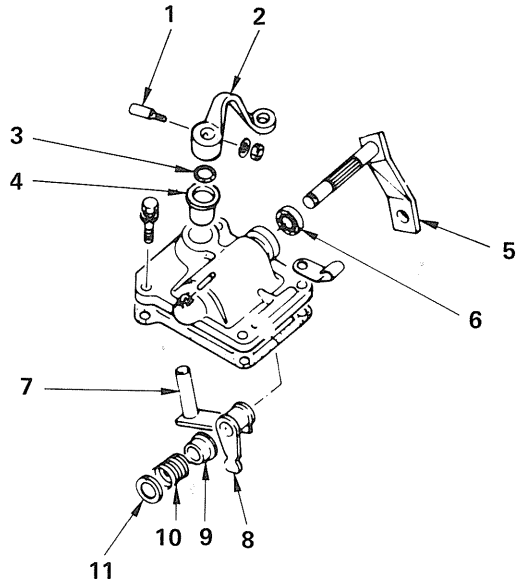

Disassembly steps

1. Select lever bolt
2. External select lever
3. O-ring
4. Bushing
5. External shift lever
6. Oil seal
7. Internal select lever
8. Internal shift lever
9. Sleeve
10. Spring
11. Spring seat

INSPECTION AND REPAIR

Make necessary correction or parts replacement if wear, damage or any other abnormal conditions are found through inspection.

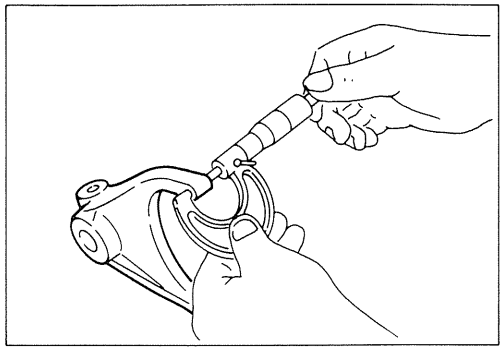

Shift arm thickness

mm(in.)

	Standard	Limit
Low/2nd	7.8—7.9 (0.307—0.311)	7.0 (0.276)
3rd/4th	7.1—7.2 (0.280—0.283)	6.5 (0.256)
Rev./5th	6.8—6.9 (0.268—0.272)	6.3 (0.248)

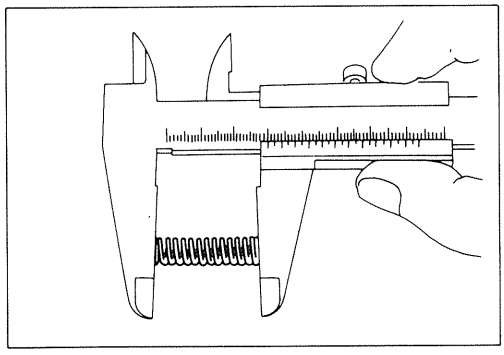

Free length of detent springs

mm(in.)

Standard	Limit
27.7 (1.091)	24.7 (0.973)

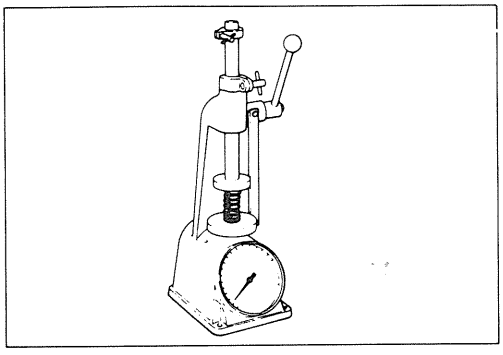

Spring tension

kg(lb.)

Set length	Standard	Limit
22.1 mm (0.87 in.)	6.3—6.7 (13.9—14.8)	5.7 (12.6)

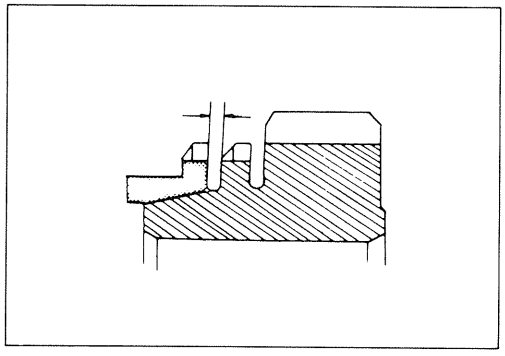

Clearance between blocker ring and gear

mm(in.)

Standard	Limit
1.5 (0.059)	0.8 (0.031)

	Standard	Limit
Low/2nd	1.7 (0.067)	0.8 (0.032)
3rd/5th	1.5 (0.059)	0.8 (0.032)
Top	1.3 (0.051)	0.8 (0.032)

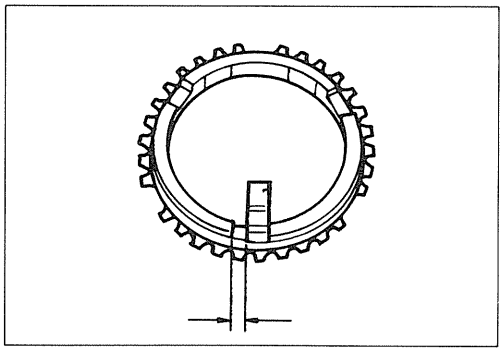

Clearance between blocker ring and inserts

mm(in.)

Standard	Limit
3.51—3.79 (0.138—0.149)	4.0 (0.157)

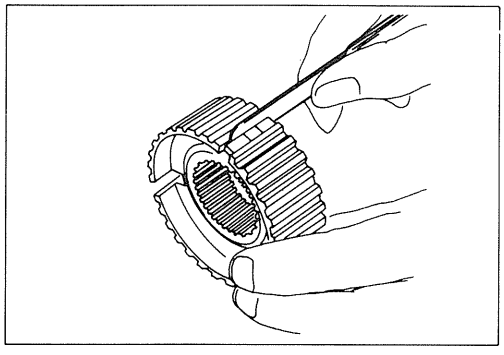

Clearance between clutch hub and inserts

mm(in.)

Standard	Limit
0.01—0.19 (0.0004—0.0075)	0.3 (0.012)

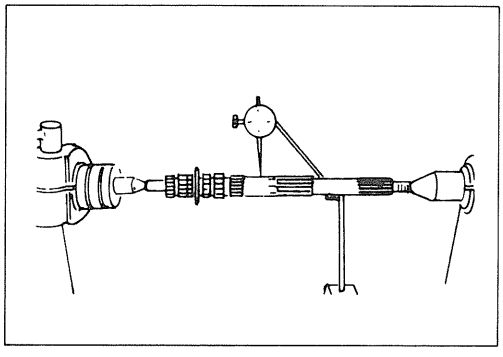

Main shaft run-out

Limit	mm(in.)	0.03 (0.001)

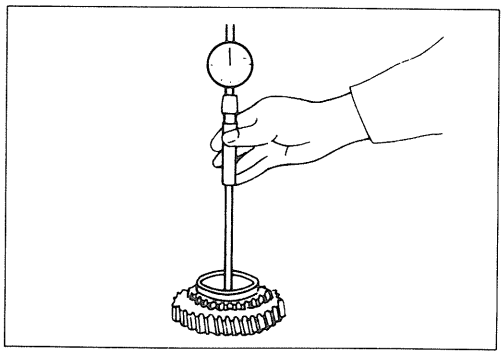

Gear inside diameter

mm(in.)

	Standard	Limit
Low, rev.	45.0—45.01 (1.772—1.77339)	45.1 (1.776)
2nd, 3rd	41.0—41.01 (1.614—1.61579)	41.1 (1.618)
5th (C223NA)	32.03—32.04 (1.261—1.26141)	32.1 (1.264)
5th 4ZD1	34.03—34.04 (1.334—1.340)	34.1 (1.343)

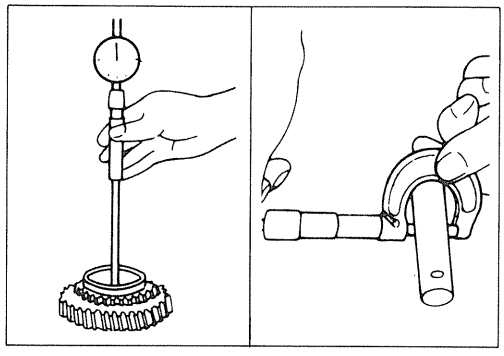

Clearance between bushing and idler gear shaft

mm(in.)

Standard	Limit
0.041—0.074 (0.0016—0.0292)	0.15 (0.006)

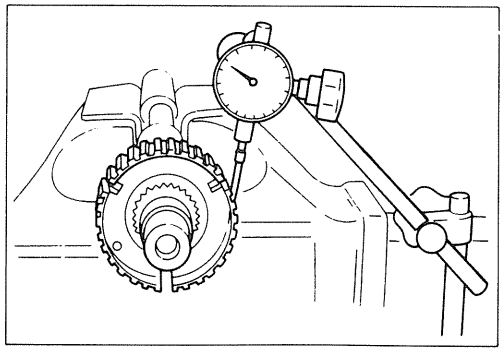

Play in splines

mm(in.)

	Standard	Limit
Top, 3rd	0—0.19 (0—0.0075)	0.20 (0.0079)
Low, 2nd	0—0.19 (0—0.0075)	0.20 (0.0079)

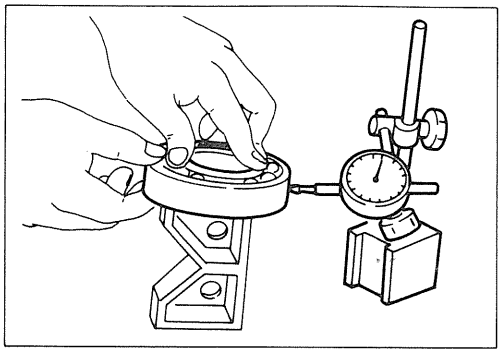

Play in ball bearings

Limit	mm(in.)	0.2 (0.0079)

REASSEMBLY

MINOR COMPONENTS

QUADRANT BOX ASSEMBLY

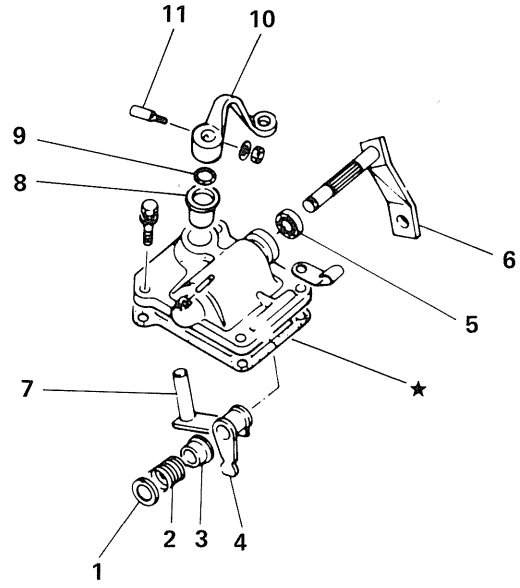

★ Repair Packing

Reassembly steps

1. Spring seat
2. Spring
3. Sleeve
4. Internal shift lever
5. Oil seal
▲ 6. External shift lever
7. Internal select lever
8. Bushing
9. O-ring
10. External select lever
11. Select lever bolt

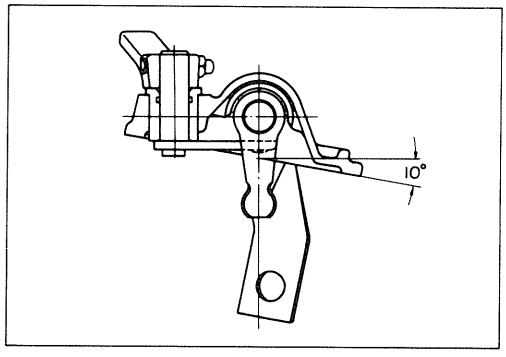

Important operaion

6. External shift lever

MEMO

"QUALITY PARTS YOU CAN TRUST"

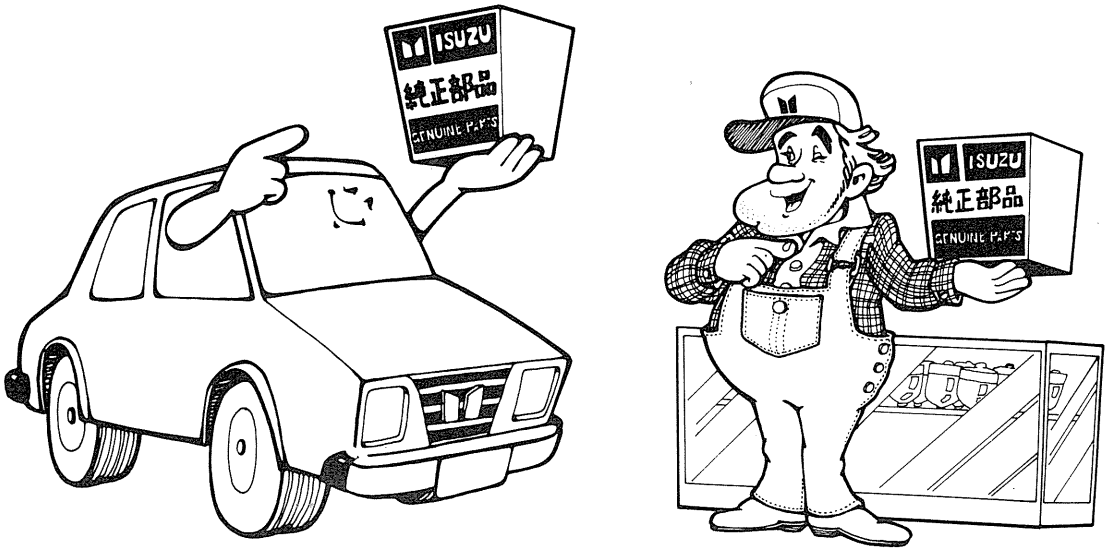

MINOR COMPONENTS

MAIN SHAFT ASSEMBLY, CLUSTER GEAR ASSEMBLY AND TOP GEAR ASSEMBLY

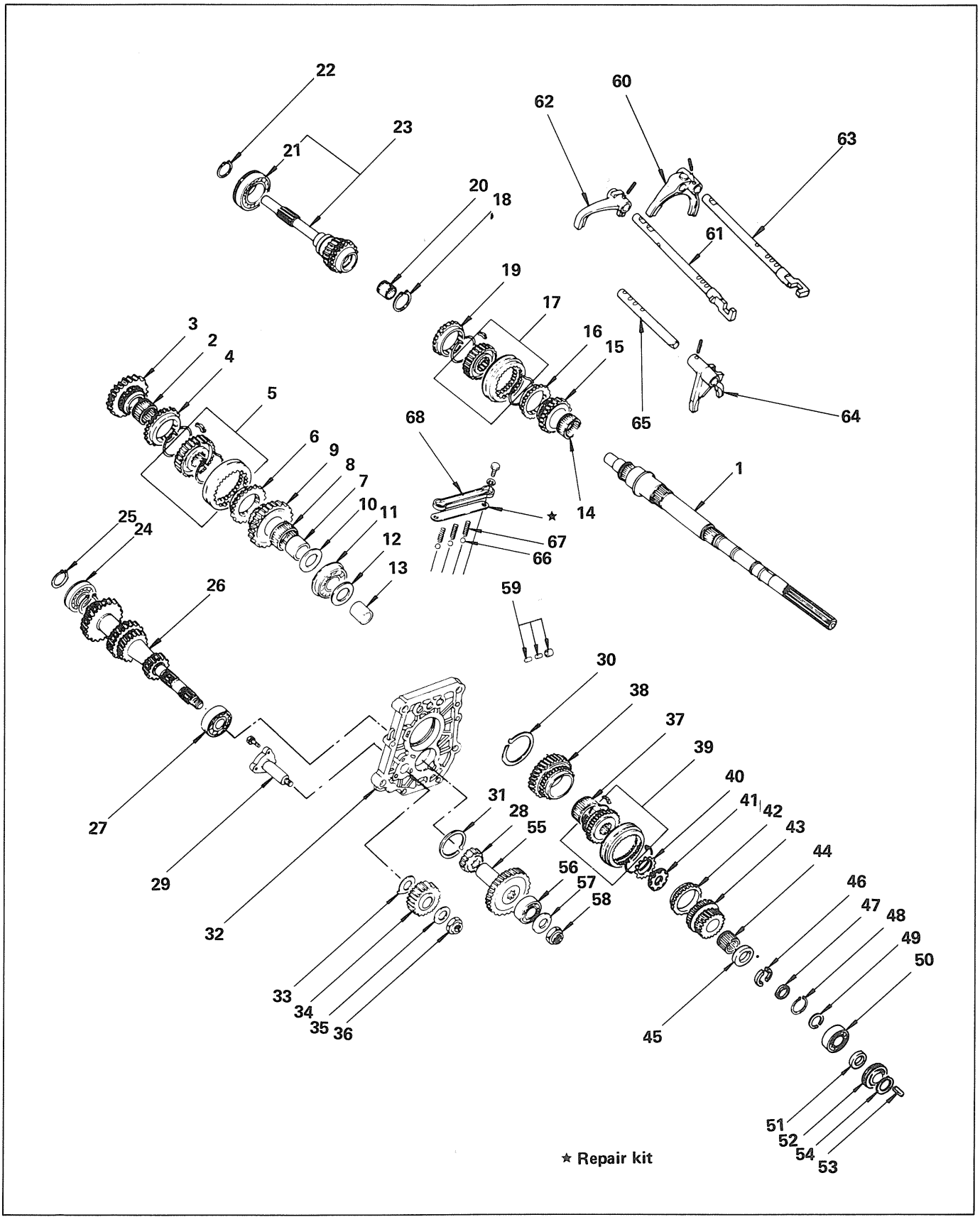

Reassembly steps

1. Shaft ; main
2. Bearing ; needle, 2nd, 3rd
3. ▲ Gear assembly ; 2nd with synchronizer cone
4. Ring ; block, low-2nd
5. ▲ Synchronizer assembly ; low-2nd
6. Ring ; block, low-2nd
7. ▲ Coller ; needle bearing, low
8. Bearing ; needle, low
9. Gear assembly ; low with synchronizer cone
10. ▲ Washer ; thrust, low
11. ▲ Bearing ; radial ball, main shaft
12. ▲ Washer ; thrust, reverse
13. ▲ Coller ; needle bearing, reverse
14. Bearing ; needle, 2nd, 3rd
15. Gear assembly ; 3rd with synchronizer cone
16. Ring ; block, top-3rd
17. ▲ Synchronizer assembly ; top-3rd
18. ▲ Ring ; snap, main shaft
19. Ring ; block, top-3rd
20. Bearing ; needle, main shaft
21. ▲ Bearing ; ball, top gear shaft
22. Ring ; snap, bearing to top gear shaft
23. Shaft ; top gear, with synchronizer cone
24. Bearing ; ball, counter front
25. Ring snap, cluster gear
26. Gear ; cluster
27. ▲ Bearing ; angular ball, cluster
28. Gear ; counter reverse
29. ▲ Shaft ; reverse idle
30. Ring ; snap, main shaft
31. Ring ; snap, cluster gear
32. ▲ Plate ; intermediate
33. Washer ; thrust, reverse idle, front
34. Gear ; reverse idle, with busing
35. Washer ; thrust, reverse idle, rear
36. ▲ Nut ; self lock, counter
37. Bearing ; needle, low
38. Gear ; reverse, main shaft
39. ▲ Synchronizer assembly ; reverse-5th
40. Washer ; lock, main shaft
41. ▲ Nut ; main shaft
42. Ring ; block, 5th
43. Gear assembly ; 5th with synchronizer cone
44. Bearing ; needle, 5th
45. ▲ Washer ; thrust, 5th
46. Thrust ring ; 5th gear
47. ▲ Ring ; snap, thrust ring
48. Retaning ring
49. Ring ; snap, ball bearing
50. Bearing ; ball, main shaft end
51. Spacer ; bearing, drive gear
52. Gear ; speed drive
53. Key ; feather, speed drive gear
54. Ring ; snap, speed drive gear
55. Gear ; counter, 5th
56. Bearing ; ball, counter end
57. Washer ; plane, counter 5th gear
58. ▲ Nut ; self lock, counter
59. Pin and plug ; inter lock
60. Fork ; low-2nd, shift
61. ▲ Shaft ; arm, gear shift, top-3rd
62. Fork ; top-3rd, shift
63. ▲ Shaft ; arm, gear shift, low-2nd
64. Fork ; reverse-5th, shift
65. ▲ Shaft ; arm, gear shift, reverse-5th
66. Ball ; detent, gear shift
67. ▲ Spring ; detent ball
68. ▲ Plate ; detent spring

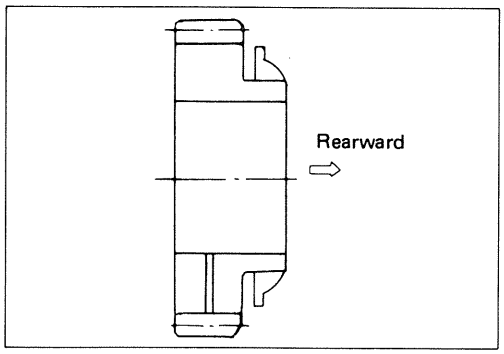

Important operations

3. Gear assembly ; 2nd with synchronizer cone

The taper cone face of the second gear should be turned to the low gear side (rearward).

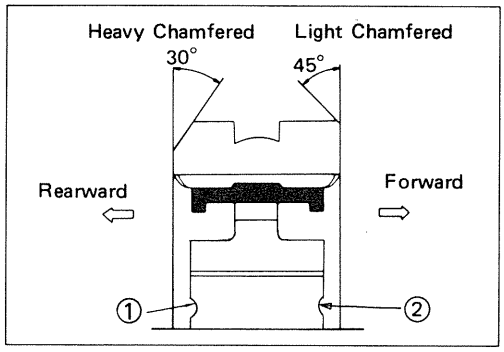

5. Synchronizer assembly ; low-2nd

(1) When reassembling the synchronizer assembly, the side of the clutch hub with the ② oil groove must face the heavy chamfer of the sleeve.

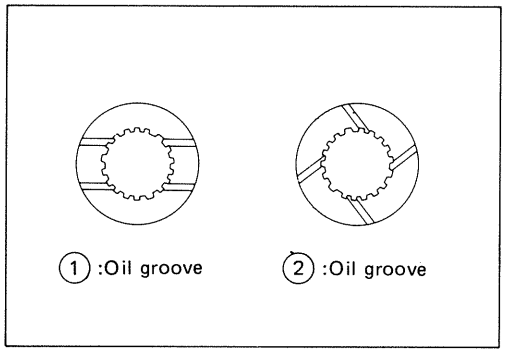

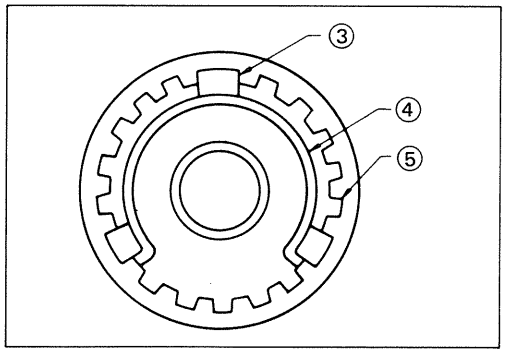

(2) Check that the inserts fit properly into the insert grooves in the blocker ring and that the insert spring is aligned with the insert keys as shown in this figure. Then check that the clutch hub and sleeve slide smoothly.

(3) Install the synchronizer assembly on the shaft, so that face of sleeve with light chamfer on the outer edge is turned to the front of transmission.

③ ; Insert key
④ ; Insert spring
⑤ ; Clutch hub

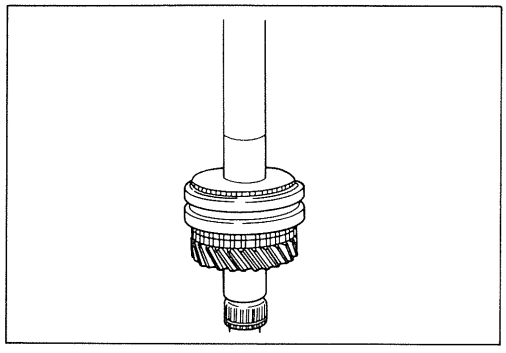

7. Collar ; needle bearing, low

Use a bench press.

Installer : 5-8840-0178-0
(J-33851)

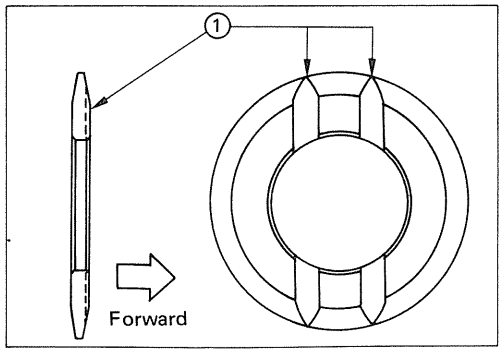

10. Washer ; thrust, low

Install the thrust washer, so that the side with oil groove is turned forward.

① ; Oil groove

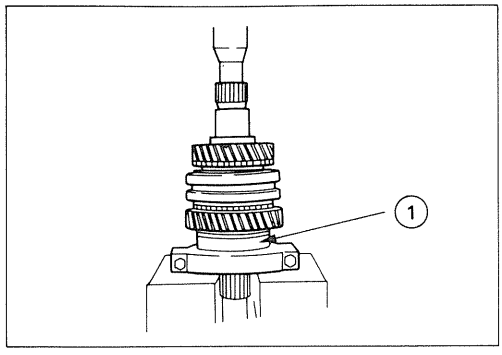

11. Bearing ; radial ball, main shaft

Set the main shaft ball bearing to the separator, so that the face with the snap ring groove is turned to the front of transmission, then install the bearing on the shaft using a bench press.

① ; Snap ring groove

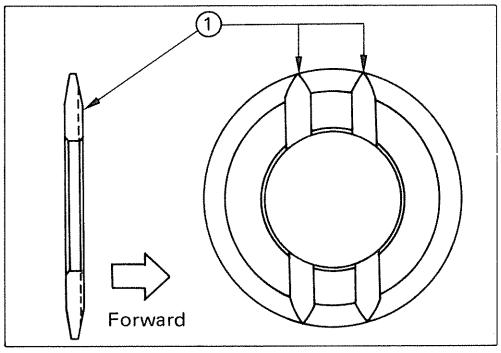

12. Washer ; thrust, reverse

Install the thrust washer, so that the side with oil groove is turned forward.

① ; Oil groove

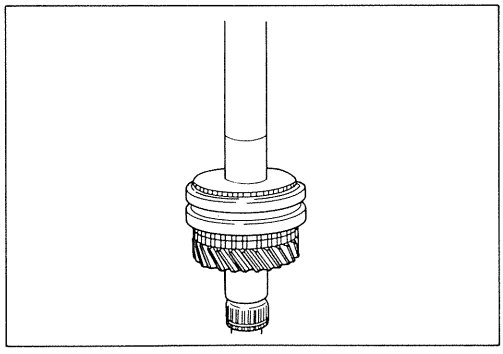

13. Collar ; needle bearing, reverse

Use a bench press.

Installer : 5-8840-0178-0
(J-33851)

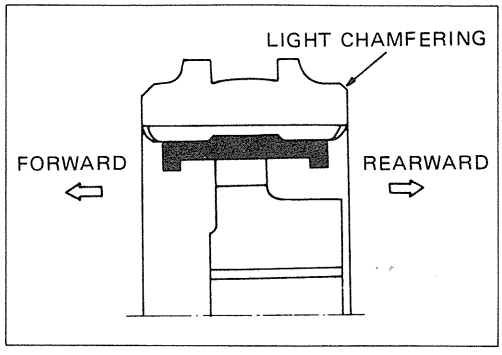

17. Synchronizer assembly ; top-3rd

When reassembling the synchronizer assembly, the side of the hub with the higher boss must face the light chamfer of the sleeve.

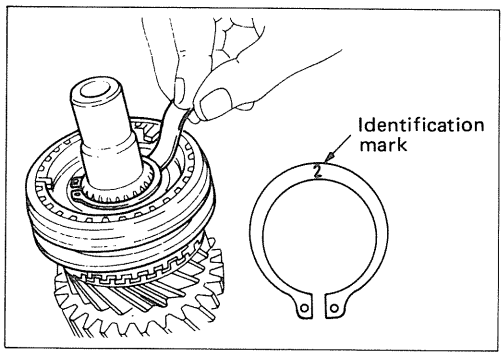

18. Ring ; snap, main shaft

Clearance between top/3rd clutch hub and snap ring.

Standard	mm(in.)	0—0.05 (0—0.0019)

Thicknesses of available snap rings:

Thickness		Identification mark
Millimeters	Inches	
1.50	0.059	1
1.55	0.061	2
1.60	0.063	3
1.65	0.065	4

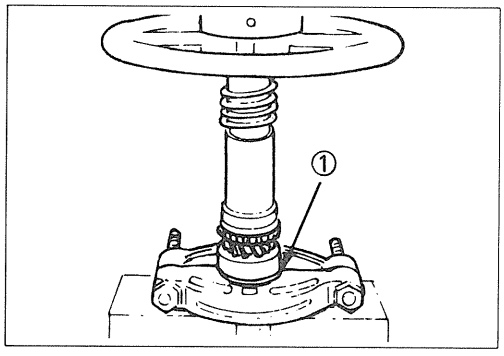

21. Bearing ; ball, top gear shaft

Install the top gear shaft ball bearing, so that the side with snap ring groove is turned to front.

① ; Snap ring groove

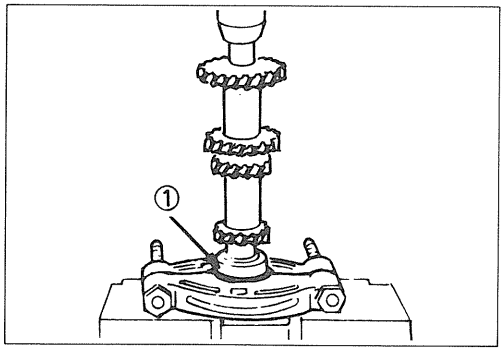

27. Bearing ; angular ball, cluster

Install the cluster gear rear bearing, so that the side with snap ring groove is turned rearward.

① ; Snap groove

29. Shaft ; reverse idle

Torque	kg·m(ft.lbs.)	1.8—2.2 (13—16)

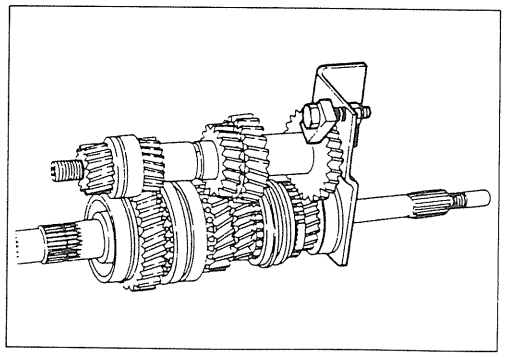

32. Plate ; intermadiate

Mesh the countergear with the mainshaft assembly and attach Tool to the mainshaft and the countergear.
Place Tool with the mainshaft and countergear assembled in a vise, then install the intermediate plate.

Holding fixture : 5-8840-2001-0
(J-29768)

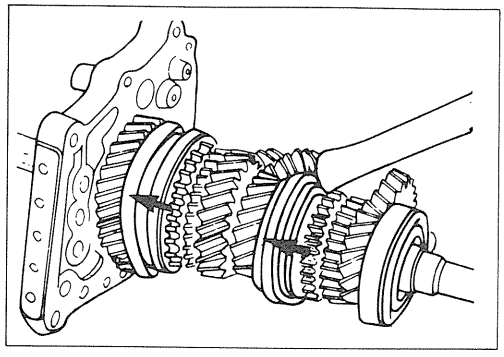

Engage the Top/3rd and Low/2nd synchronizers with the 3rd and Low gears, then attach and tighten the lock nuts to the specified torque as follows.

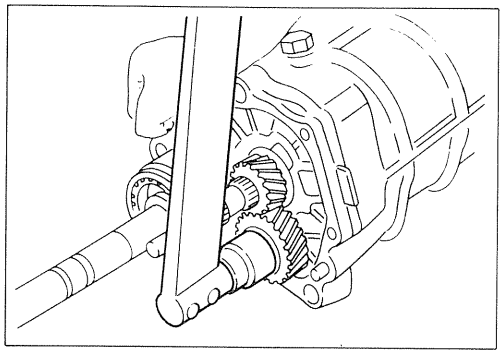

36. Nut ; self locking, counter

Torque	kg·m(ft.lbs.)	10—12 (72—87)

Discard the used nut and install new one at reassembly.

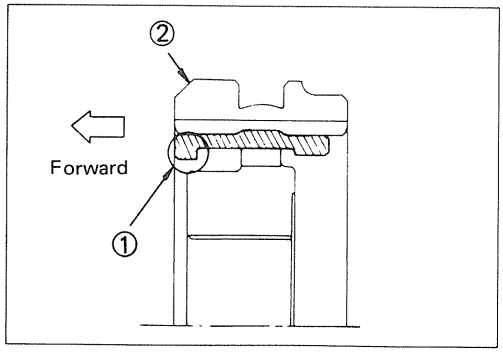

39. Synchronizer assembly ; reverse-5th

When reassembling the synchronizer assembly, the side of the clutch hub with higher boss must face the heavy chamfer of the sleeve. The shorter shoulder side of the insert should be on the same side.

① ; Shorter shoulder side
② ; Heavy chamfering

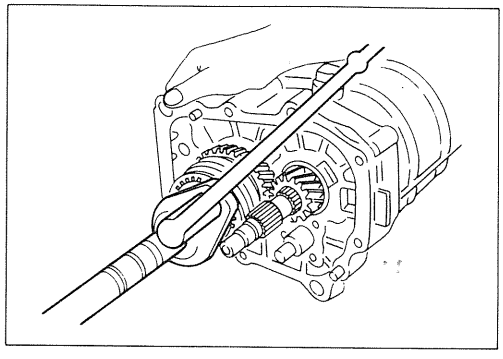

41. Nut ; main shaft

Lock the nut with lock washer after tightening it to the specified torque.
"Be absolutely certain to bend the lock washer pawl in two places."

Wrench : 5-8521-9014-0
(J-33441)

Torque	kg·m(ft.lbs.)	12—14 (87—101)

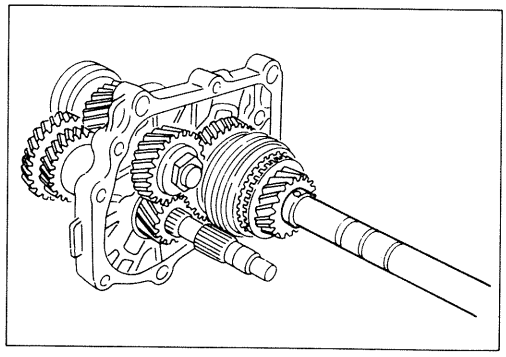

45. Washer ; thrust, 5th

Install the lock ball and thrust washer on the mainshaft using a snap ring.

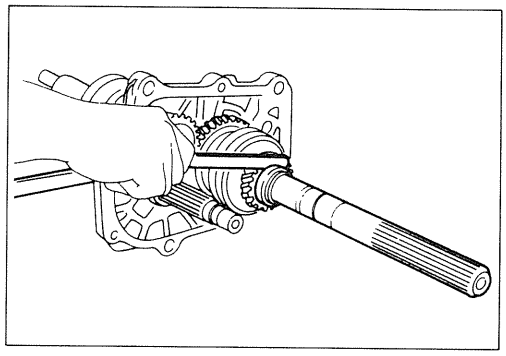

Clearance between 5th gear and thrust washer.

Standard	mm(in.)	0.10—0.30 (0.004—0.012)

Thicknesses of thrust washers available.

(mm)	7.8,	7.9,	8.0,	8.1,	8.2,	8.3
(in.)	0.307,	0.311,	0.315,	0.319,	0.323,	0.327

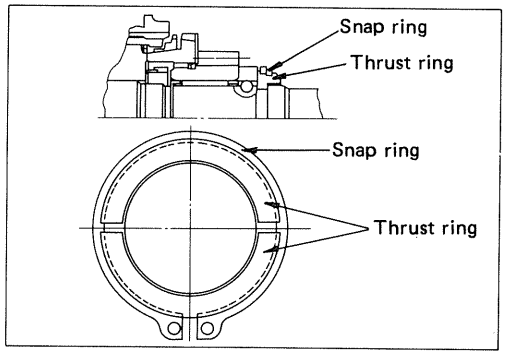

47. Ring ; snap, thrust ring

The opening of the snap ring should be positioned at right angle to opening of the thrust ring.

58. Nut

Torque	kg·m(ft.lbs.)	10—12 (72—87)

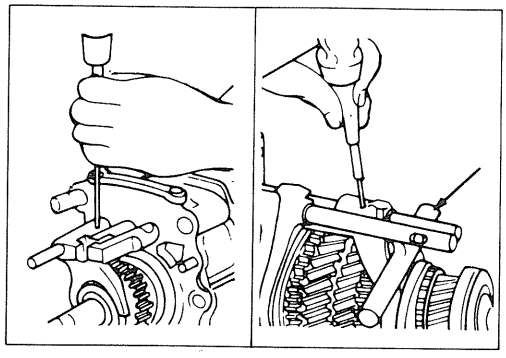

61. Shaft ; arm, gear shift, top-3rd

63. Shaft ; arm, gear shaft, low-2nd

65. Shaft ; arm, gear shift, reverse-5th

When installing spring pin, hold a round bar against lower face of shift rod end to protect it against damage.

Discard used spring pin and install a new one at reassembly.

Spring pin installer : 9-8529-2201-0

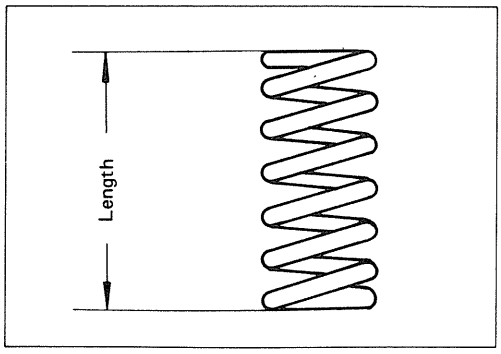

67. Spring ; detent ball

The detent spring for Rev./5th is shorter in length when compared with those for Low/2nd and Top/4th.

mm(in.)

Spring length	27.7 (1.091)

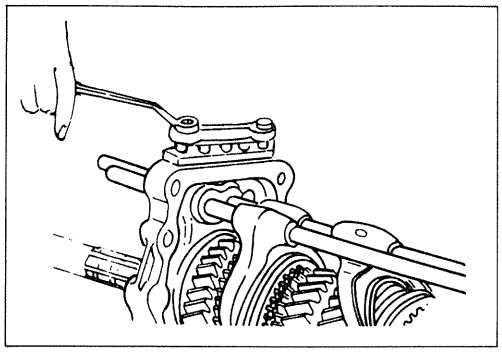

68. Plate ; detent spring

Torque kg·m(ft.lbs.)	1.8—2.2 (13—16)

MAJOR COMPONENTS

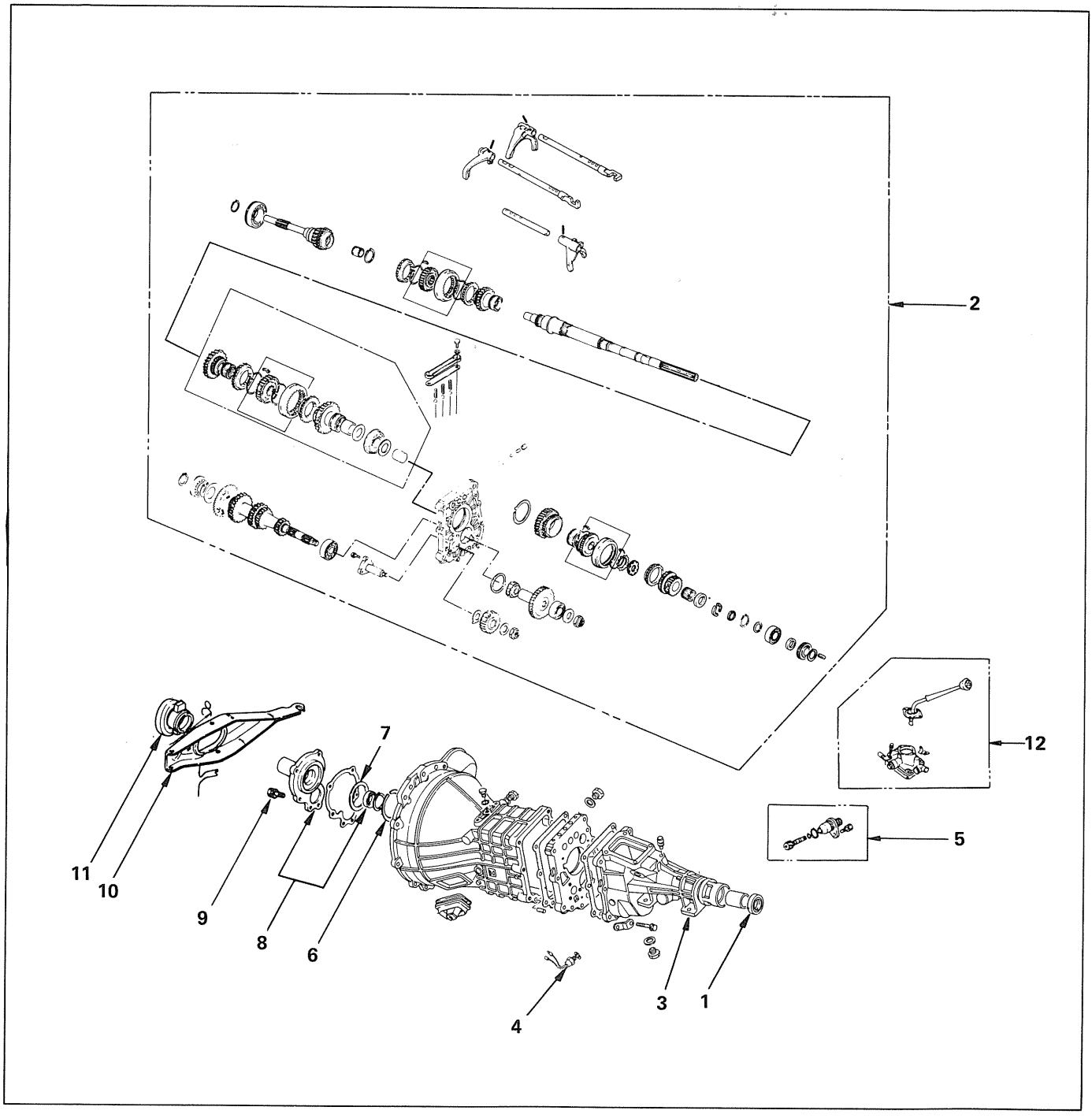

Reassembly steps

- ▲ 1. Oil seal
- ▲ 2. Mainshaft assembly, cluster gear assembly and top gear shaft assembly
- ▲ 3. Rear cover
- 4. Back-up light switch
- ▲ 5. Speedometer driven gear assembly
- 6. Snap ring
- ▲ 7. Belleville spring
- ▲ 8. Front cover, oil seal
- ▲ 9. Bolt; front cover
- 10. Withdraw lever
- ▲ 11. Shift block assembly
- 12. Quadrant box assembly

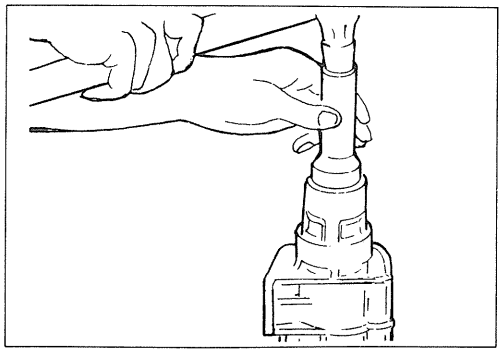

Important operations

1. Oil seal

Oil seal installer : 5-85220-026-0
(J-26508)

2. Main shaft assembly, cluster gear assembly, top gear shaft assembly.

(1) Apply a small amount of oil or grease to the top gear shaft ball bearing joining surface of the transmission case and shift rods to facilitate smooth installation.

(2) When the intermediate plate assembly is installed, pull out the top gear shaft until the ball bearing snap ring groove is projected beyond the front cover fitting face of the transmission case.

(3) Do not apply shock load to the main shaft.

3. Rear cover

Install the rear cover with gasket on the transmission case by aligning the dowel pin.

Torque	kg·m(ft.lbs.)	3.8—4.2 (27—30)

5. Speedometer drive gear, oil seal, bushing O-ring

Key groove is contoured to receive feather key.

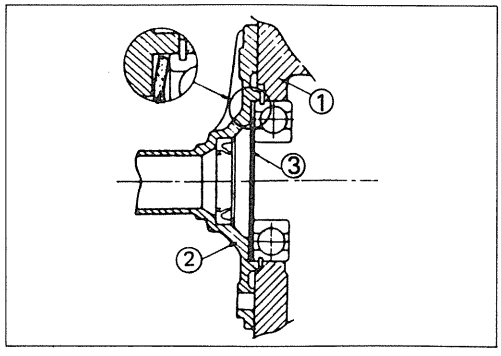

7. Belleville spring

The belleville spring should be so installed that its dished face is turned to the bearing outer race.

① : Transmission case
② : Front cover
③ : Belleville spring

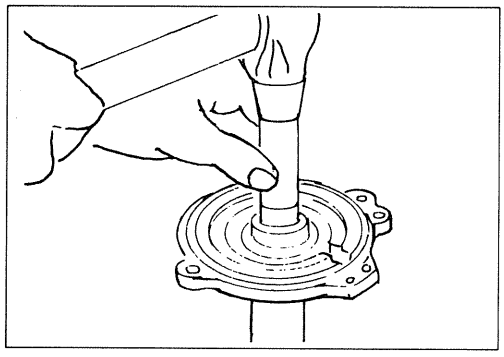

8. Front cover, oil seal

Install the front cover oil seal.
Oil seal installer : 5-8840-0026-0
(J-26540)

9. Bolt; front cover

Torque	kg·m(ft.lbs.)	1.8—2.2 (13—16)

Apply adhesive (Permatex No. 2 or equivalent) to the threaded portion of the through bolt on the left lower side of the transmission case (as viewed from front side of the case) before installation.

11. Shift block assembly

Apply grease to the inner face of the shift block.
Check that the hook on the shift fork is fitted to the support properly.

TRANSMISSION CONTROL

DISASSEMBLY

GEAR CONTROL ASSEMBLY

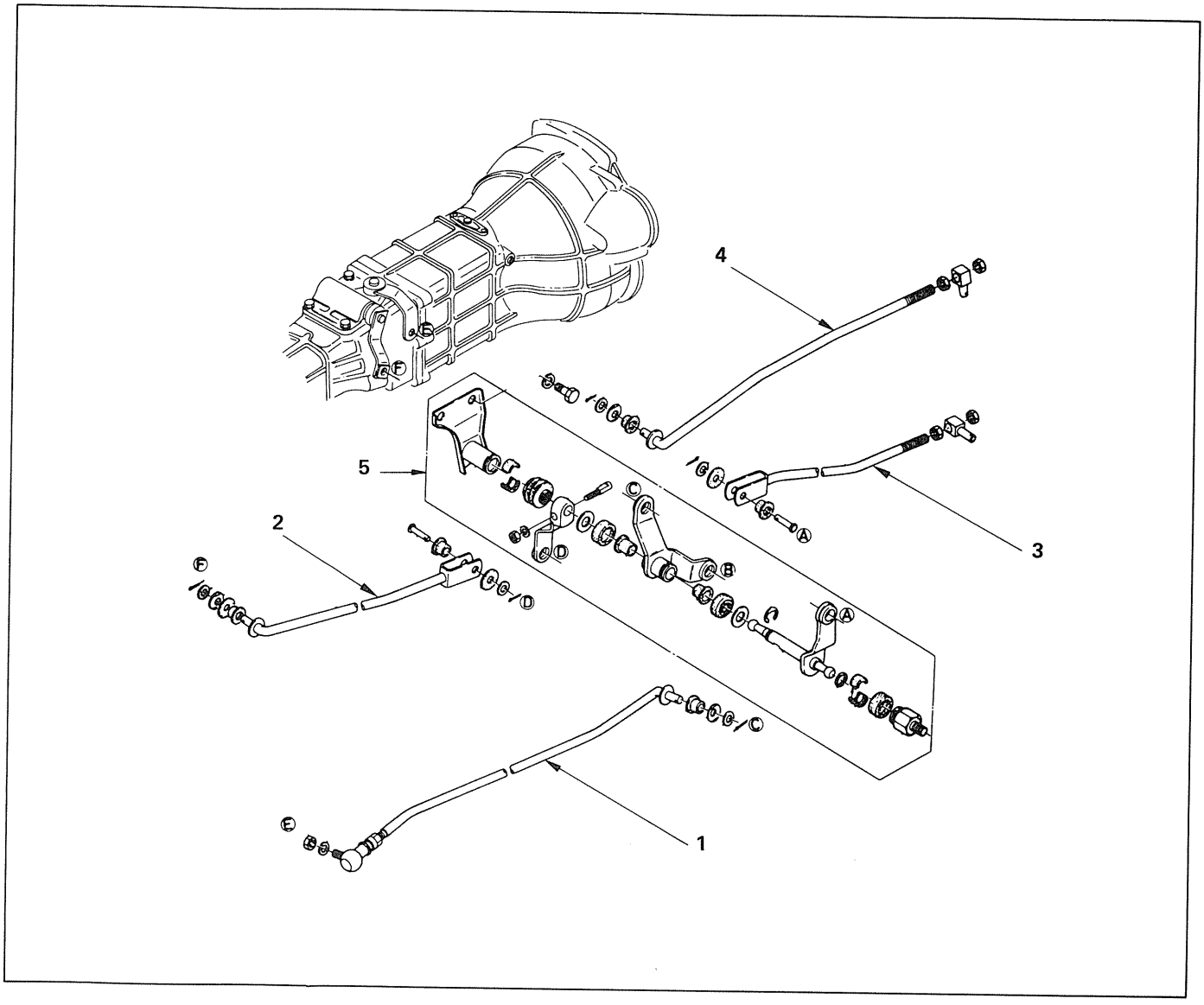

Disassembly steps

1. Select rod ; rear
2. Shift rod ; rear
3. Shift rod ; front
4. Select rod ; front
5. Relay lever and bracket assembly

CHANGE LEVER ASSEMBLY

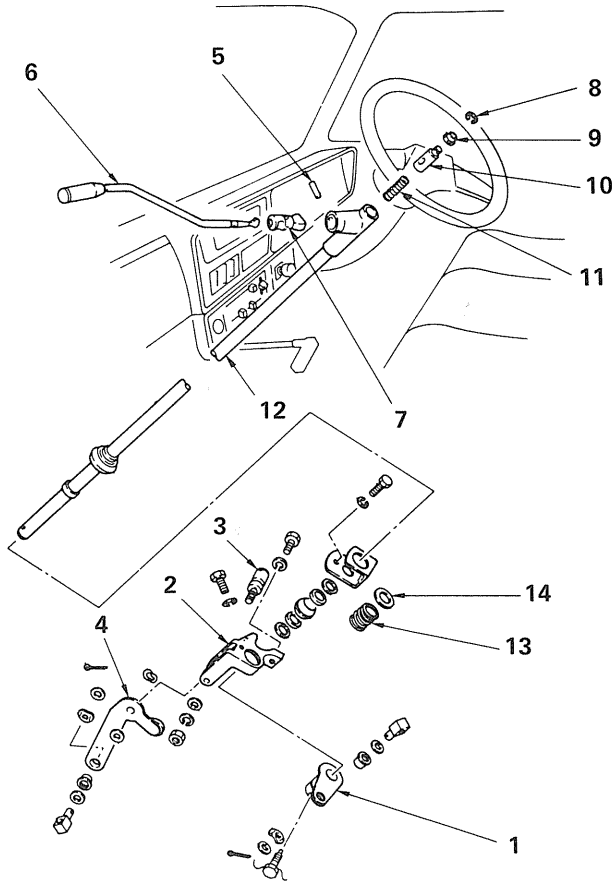

Disassembly steps

1. Shift lever
2. Lower support bracket
3. Pivot pin
4. Select lever
5. Pin
6. Gear shift lever
7. Dust cover
8. Snap ring
9. Seat
10. Shaft
11. Spring
12. Control shaft
13. Return spring
14. Washer

INSPECTION AND REPAIR

Make necessary correction or parts replacement if wear, damage or any other abnormal conditions are found through inspection.

REASSEMBLY

CHANGE LEVER ASSEMBLY

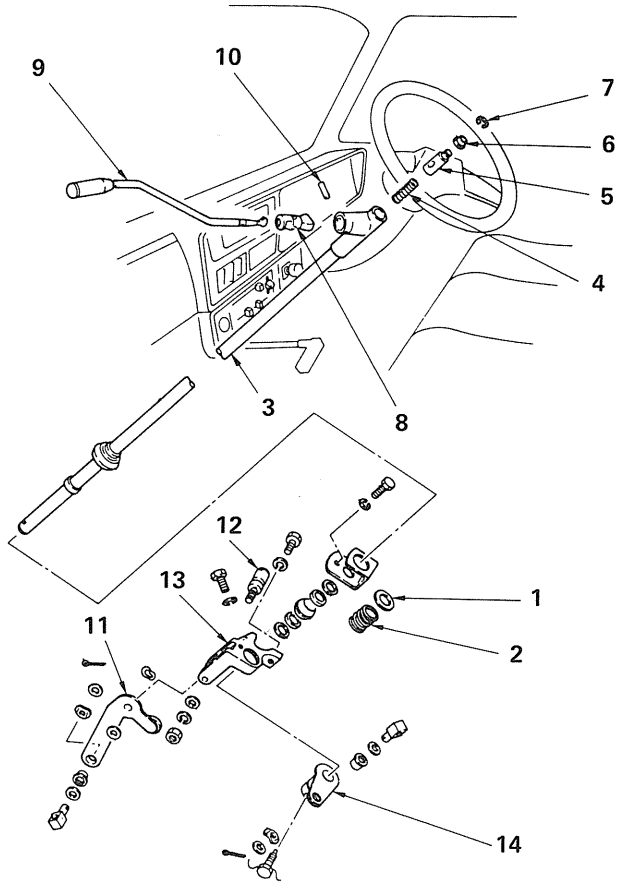

Reassembly steps

1. Washer
2. Return spring
3. Control shaft
4. Spring
5. Shaft
6. Seat
7. Snap ring
8. Dust cover
9. Gear shift lever
10. Pin
11. Select lever
12. Pivot pin
13. Lower support bracket
14. Shift lever

GEAR CONTROL ASSEMBLY

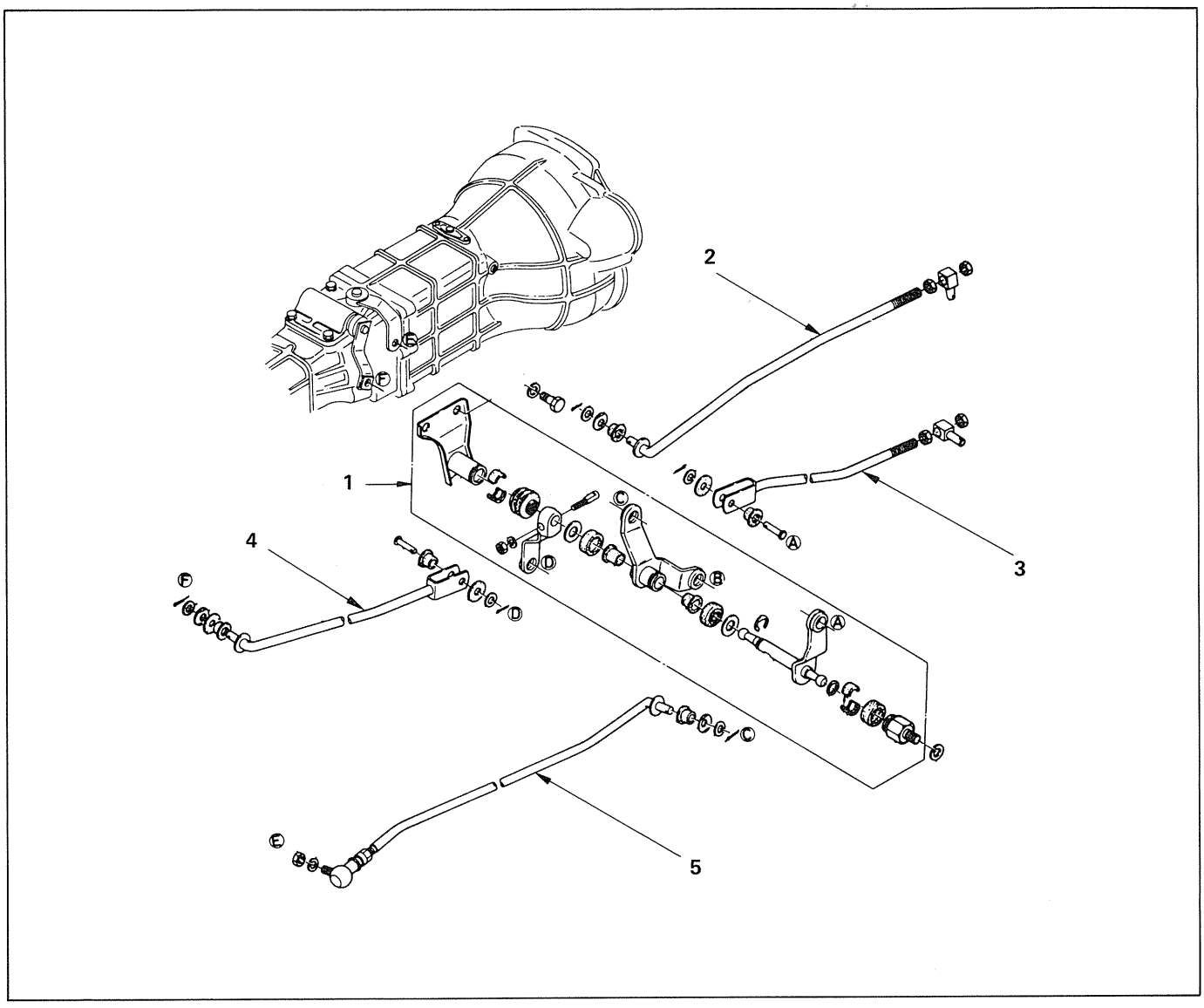

Reassembly steps

1. Relay lever and bracket assembly
2. Select rod ; front
3. Shift rod ; front
4. Shift rod ; rear
5. Select rod ; rear

TROUBLE SHOOTING

Condition	Possible Cause	Correction
Hard Shifting	1. Clutch 2. Synchronizers worn or broken. 3. Shift shafts or forks worn.	1. Adjustment 2. Replace 3. Replace
Slips out of Gear	1. Shift shafts worn. 2. Bearings worn. 3. Drive gear retainer broken or loose. 4. Excessive play in synchronizers.	1. Replace 2. Replace as necessary. 3. Tighten or replace retainer. 4. Replace
Noisy in All Gears	1. Insufficient lubricant. 2. Worn countergear bearings. 3. Worn or damaged drive gear and counter-gear. 4. Damaged drive gear or main shaft 5. Worn or damaged countergear.	1. Fill to correct level. 2. Replace countergear bearings and shaft. 3. Replace worn or damaged gears. 4. Replace damaged bearings or drive gear. 5. Replace countergear.
Noisy in Neutral	1. Damaged drive gear bearing. 2. Damaged or loose pilot bearing. 3. Worn or damaged countergear. 4. Worn countergear bearings.	1. Replace damaged bearing. 2. Replace pilot bearing. 3. Replace countergear. 4. Replace countergear bearings and shaft.
Noisy in Reverse	1. Worn or damaged reverse idler gear or idler bushing. 2. Worn or damaged reverse gear. 3. Damaged or worn countergear.	1. Replace reverse idler gear assembly. 2. Replace reverse gear. 3. Replace countergear assembly.
Leaks lubricant	1. Excessive amount of lubricant in transmission. 2. Loose or broken drive gear bearing retainer. 3. Drive gear bearing retainer gasket damaged. 4. Center support gaskets either side. 5. Rear extension seal. 6. Speedo driven gear	1. Drain to correct level. 2. Tighten or replace retainer. 3. Replace gasket. 4. Replace gaskets. 5. Replace. 6. Replace O ring seal

MEMO

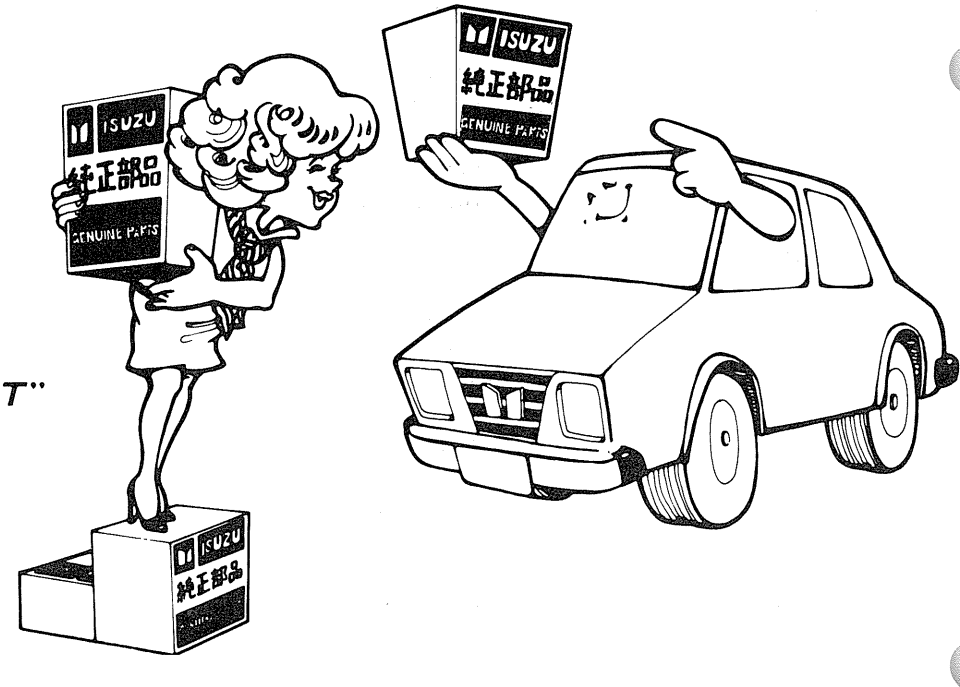

"QUALITY PARTS YOU CAN TRUST"

KBT5-WE-65G

You are requested to order this manual using the manual number that is shown above.

This manual is applicable for vehicles in all countries except USA and Canada.

Issued by

ISUZU MOTORS LIMITED

OVERSEAS SERVICE DEPARTMENT

Tokyo, Japan

First edition Aug., 1985 6508-01K-8

No. KBT5-WE-65G

PRINTED IN JAPAN